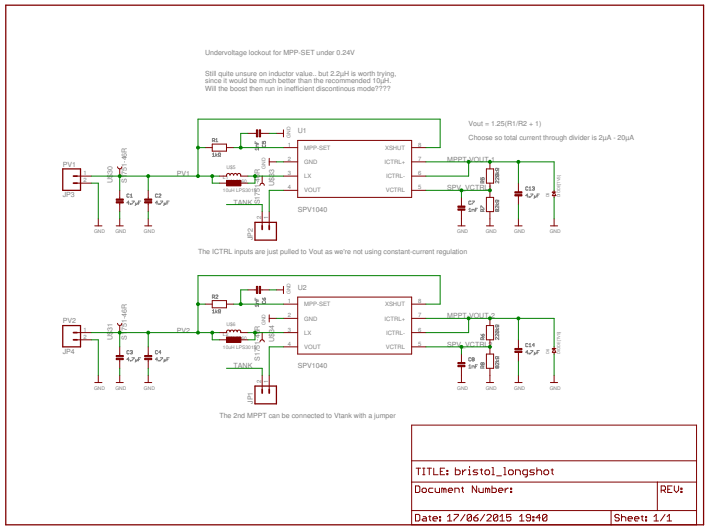
Undervoltage lockout for MPP-SET under 0.24V
Still quite unsure on inductor value.. but 2.2µH is worth trying, since it would be much better than the recommended 10µH. Will the boost then run in inefficient discontinous mode?????
Vout = 1.25(R1/R2 + 1)
Choose so total current through divider is 2µA - 20µA
The ICTRL inputs are just pulled to Vout as we're not using constant-current regulation
The 2nd MPPT can be connected to Vtank with a jumper
U1
U2
SPV1040
MPP-SET
GND
LX
VOUT
XSHUT
ICTRL+
ICTRL-
VCTRL
MPPT_VOUT1
MPPT_VOUT2
SPV_VCTRL1
SPV_VCTRL2
TANK
PV1
PV2
JP3
JP4
JP5
TITLE: bristol_longshot
Document Number:
REV:
Date: 17/06/2015 19:40
Sheet: 1/1

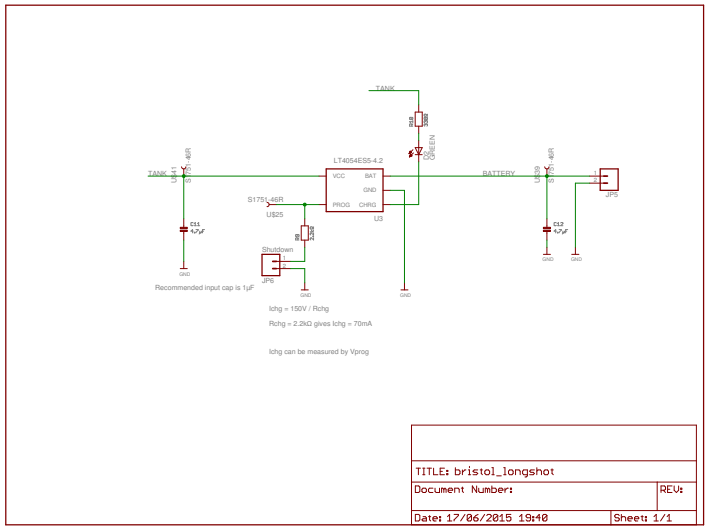
TANK
LT4054ES5-4.2
VCC
BAT
GND
PROG
CHRG
U3
BATTERY
S1751-46R
U$25
Shutdown
JP6
JP5
GREEN
Recommended input cap is 1µF
Ichg = 150V / Rchg
Rchg = 2.2kΩ gives Ichg = 70mA
Ichg can be measured by Vprog
TITLE: bristol_longshot
Document Number:
REV:
Date: 17/06/2015 19:40
Sheet: 1/1

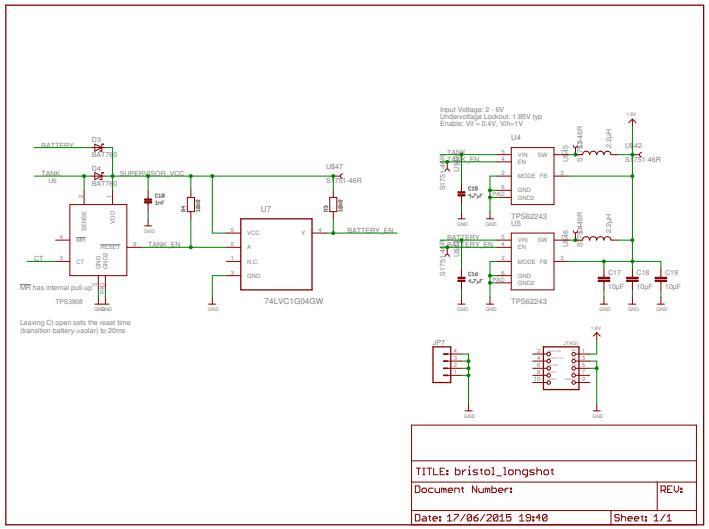
Input Voltage: 2 - 6V
Undervoltage Lockout: 1.85V typ
Enable: Vil = 0.4V, Vih=1V
BATTERY
TANK
U6
D3
D4
BA1760
SUPERVISOR_VCC
U$47
S1751-46R
U7
VCC
A
N.C.
GND
74LVC1G04GW
BATTERY_EN
TANK_EN
CT
TPS3808
Leaving Ct open sets the reset time (transition battery->solar) to 20ms
U4
U5
TPS62243
U$42
JP7
JTAG1
TITLE: bristol_longshot
Document Number:
REV:
Date: 17/06/2015 19:40
Sheet: 1/1