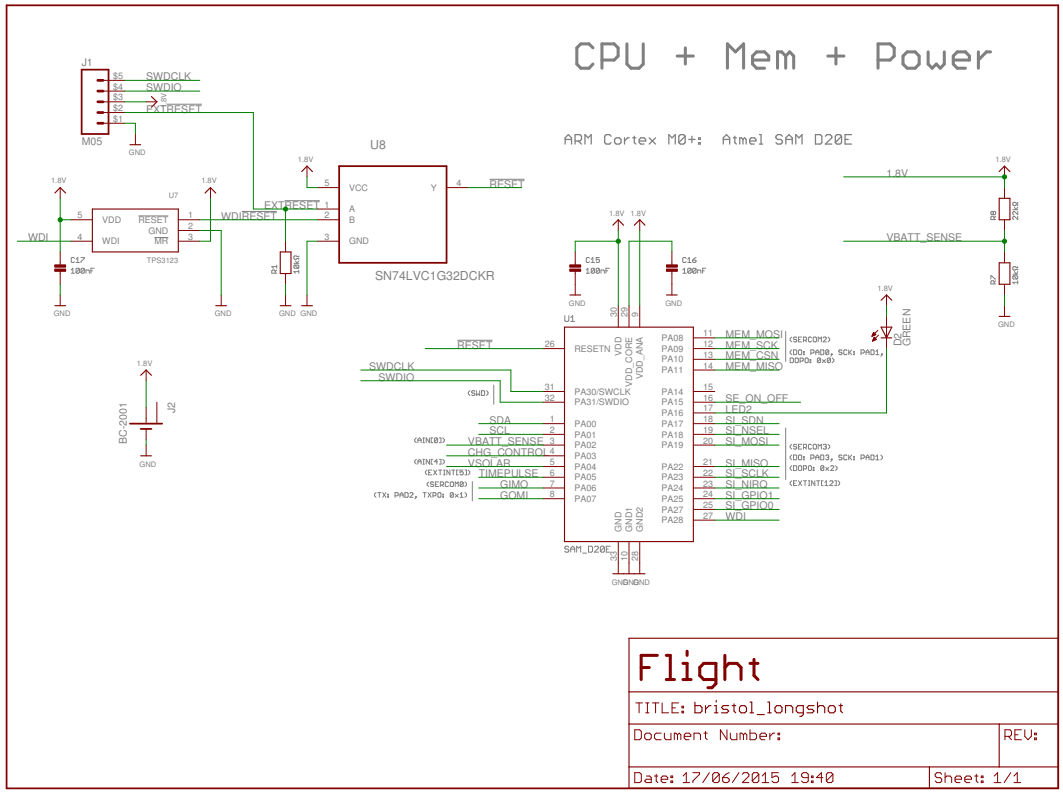
CPU + Mem + Power
ARM Cortex M0+: Atmel SAM D20E
J1
M05
SWDCLK
SWDIO
EXTRESET
U8
SN74LVC1G32DCKR
U7
TPS3123
WDI
RESET
EXTRESET
VBATT_SENSE
U1
SAM_D20E
MEM_MOSI
MEM_SCK
MEM_CSN
MEM_MISO
SF_ON_OFF
LED2
SI_SDN
SI_NSEL
SI_MOSI
SI_MISO
SI_SCLK
SI_NIRQ
SI_GPIO1
SI_GPIO0
SDA
SCL
CHG_CONTROL
VSOLAR
TIMEPULSE
GIMO
GOMI
D2 GREEN
BC2001
J2
Flight
TITLE: bristol_longshot
Document Number:
REV:
Date: 17/06/2015 19:40
Sheet: 1/1

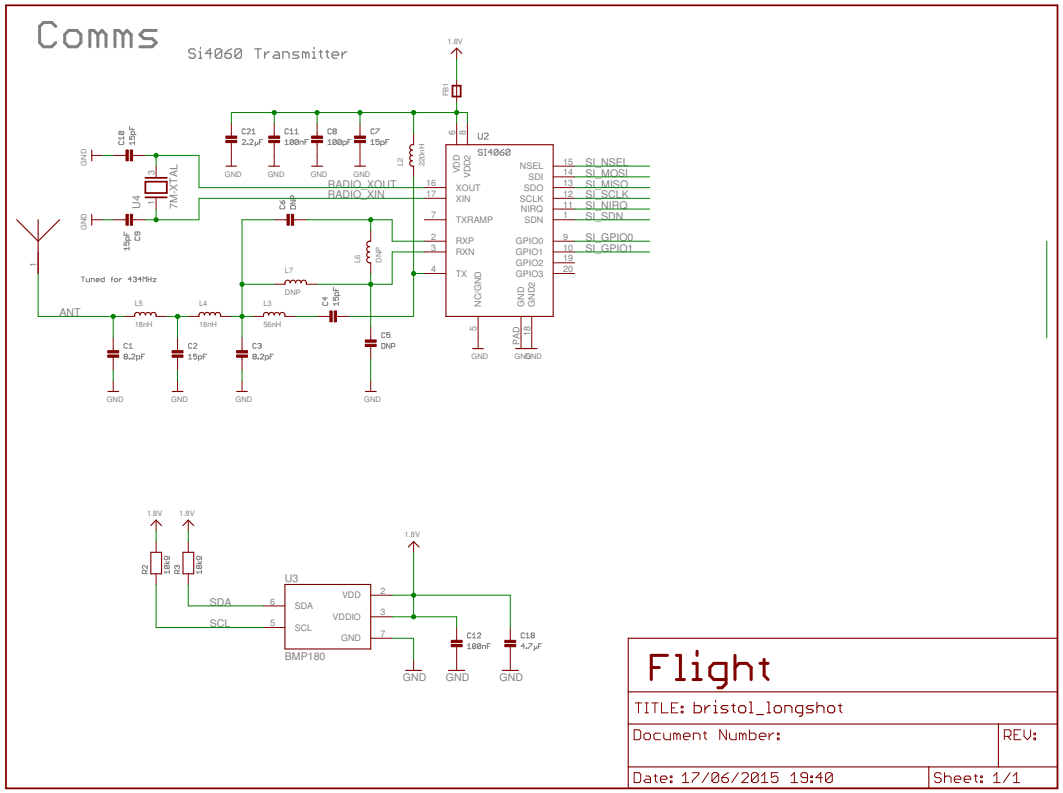
Comms
Si4060 Transmitter
U2
Si4060
RADIO_XOUT
RADIO_XIN
7MHz XTAL
Tuned for 434MHz
ANT
U3
BMP180
SDA
SCL
Flight
TITLE: bristol_longshot
Document Number:
REV:
Date: 17/06/2015 19:40
Sheet: 1/1