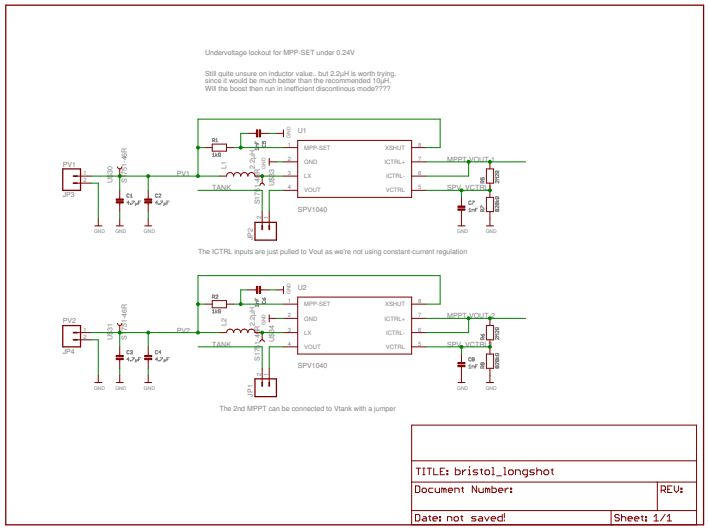
Undervoltage lockout for MPP-SET under 0.24V
Still quite unsure on inductor value.. but 2.2µH is worth trying, since it would be much better than the recommended 10µH. Will the boost then run in inefficient discontinous mode?????
U1
SPV1040
MPP-SET
GND
LX
VOUT
XSHUT
ICTRL+
ICTRL-
VCTRL
MPPT_VOUT1
SPV_VCTRL1
PV1
JP3
TANK
The ICTRL inputs are just pulled to Vout as we're not using constant-current regulation
U2
SPV1040
MPPT_VOUT2
SPV_VCTRL2
PV2
JP4
The 2nd MPPT can be connected to Vtank with a jumper
TITLE: bristol_longshot
Document Number:
REV:
Date: not saved!
Sheet: 1/1

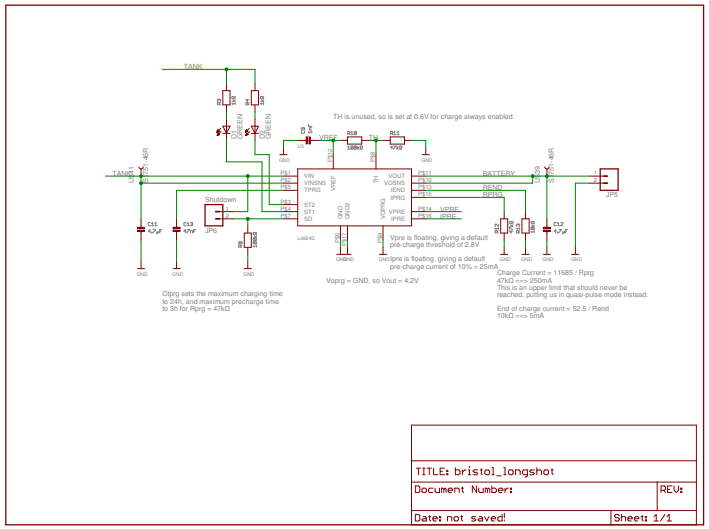
TANK
TH is unused, so is set at 0.6V for charge always enabled.
BATTERY
JP5
Shutdown
JP6
L6924D
Vpre is floating, giving a default pre-charge threshold of 2.6V
Ipre is floating, giving a default pre-charge current of 10% = 25mA
Voprg = GND, so Vout = 4.2V
Charge Current = 11685 / Rprg
47kΩ ==> 250mA
This is an upper limit that should never be reached, putting us in quasi-pulse mode instead.
End of charge current = 52.5 / Rend
10kΩ ==> 5mA
Ctprg sets the maximum charging time to 24h, and maximum precharge time to 3h for Rprg = 47kΩ
TITLE: bristol_longshot
Document Number:
REV:
Date: not saved!
Sheet: 1/1

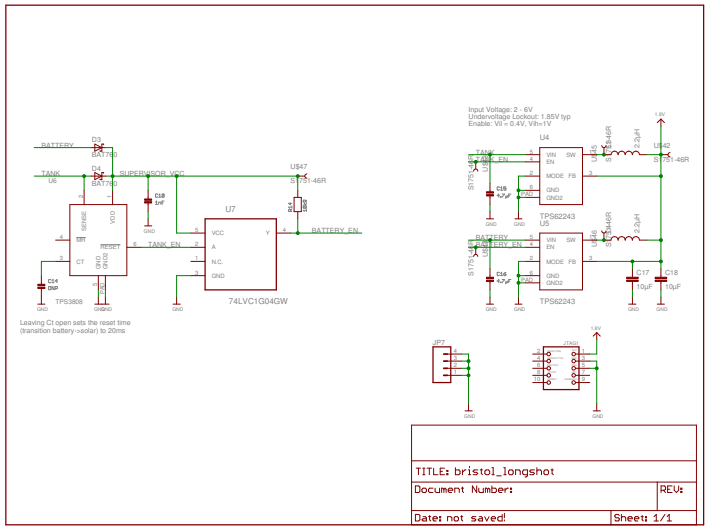
BATTERY
TANK
SUPERVISOR_VCC
U7
74LVC1G04GW
TPS3808
TANK_EN
BATTERY_EN
Leaving Ct open sets the reset time (transition battery->solar) to 20ms
Input Voltage: 2 - 6V
Undervoltage Lockout: 1.85V typ
Enable: Vil = 0.4V, Vih=1V
U4
TPS62243
U5
TPS62243
JP7
JTAG1
TITLE: bristol_longshot
Document Number:
REV:
Date: not saved!
Sheet: 1/1